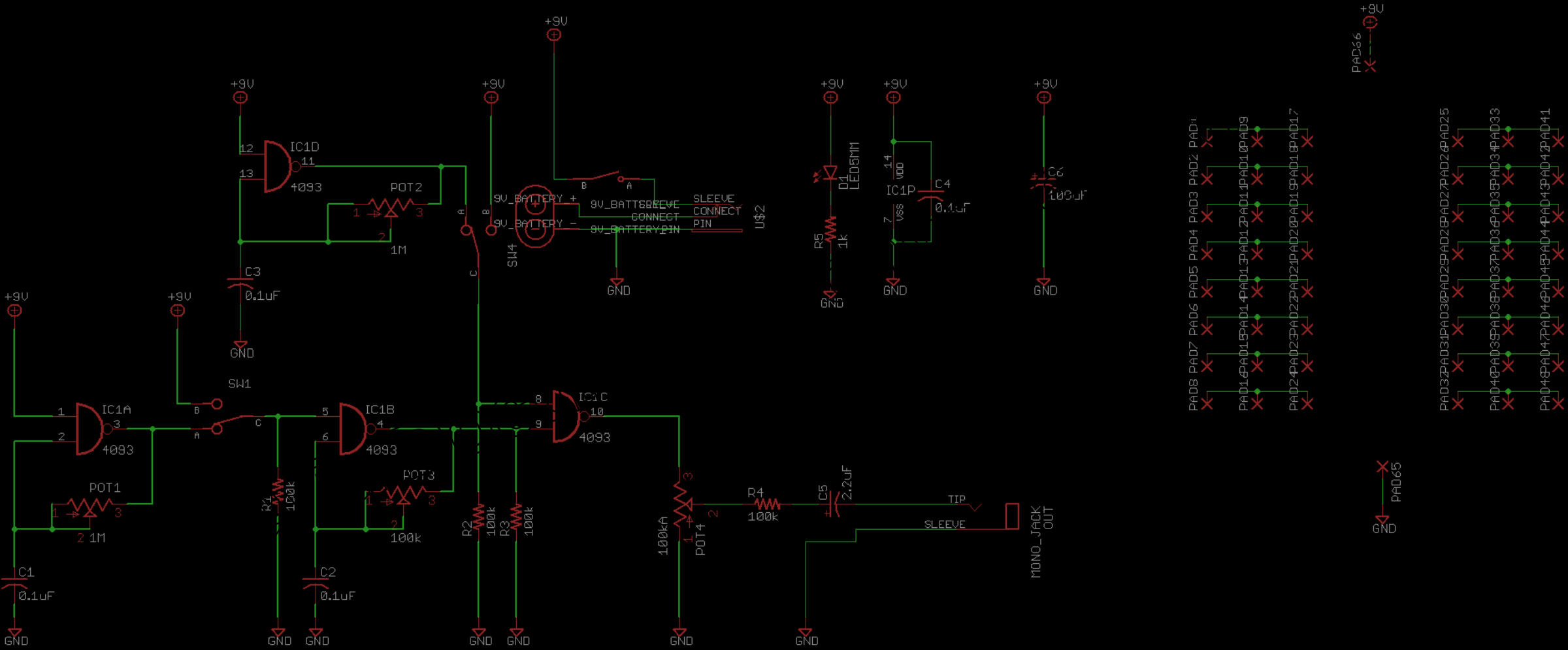
+9V
IC1D
4093
POT2
1M
C3
0.1uF
GND
9V_BATTERY +
9V_BATTERY -
9V_BATTERY
SLEEVE
CONNECT
PIN
U$2
SW4
D1
LED5MM
R5
1k
IC1P
VDD
VSS
C4
0.1uF
C6
10uF
PAD66
PAD65
IC1A
4093
POT1
1M
C1
0.1uF
SW1
IC1B
4093
POT3
100k
R1
100k
C2
0.1uF
R2
100k
R3
100k
IC1C
4093
100kA
POT4
R4
100k
C5
2.2uF
TIP
SLEEVE
MONO_JACK
OUT