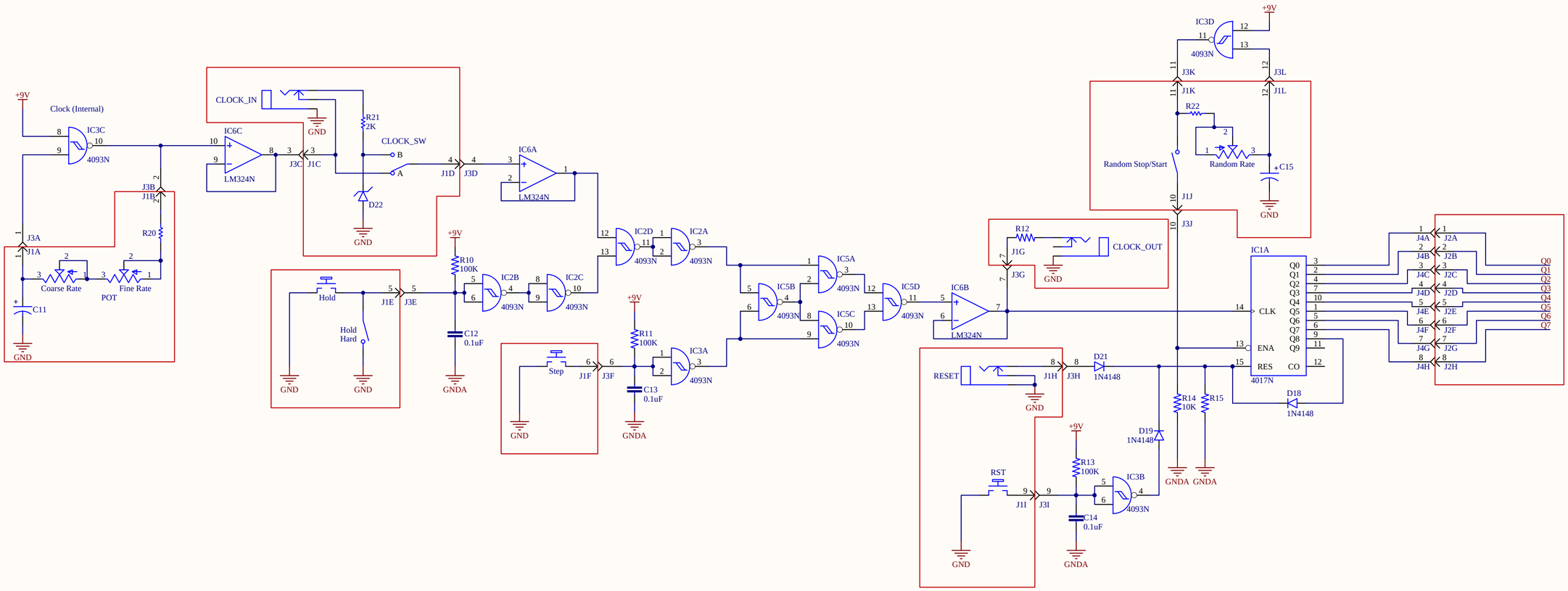

Title SYNT-001-8SS1-3.3

Size: C | Number:* | Revision:*

Date: 2/3/2014 | Time: 11:47:37 PM | Sheet* of *

File: D:\Temp\oDesk\Steve Harmon\8StepSeq\8-10_step_sequencer-3-3.SchDoc