MST DUAL ENVELOPE QUICK START GUIDE

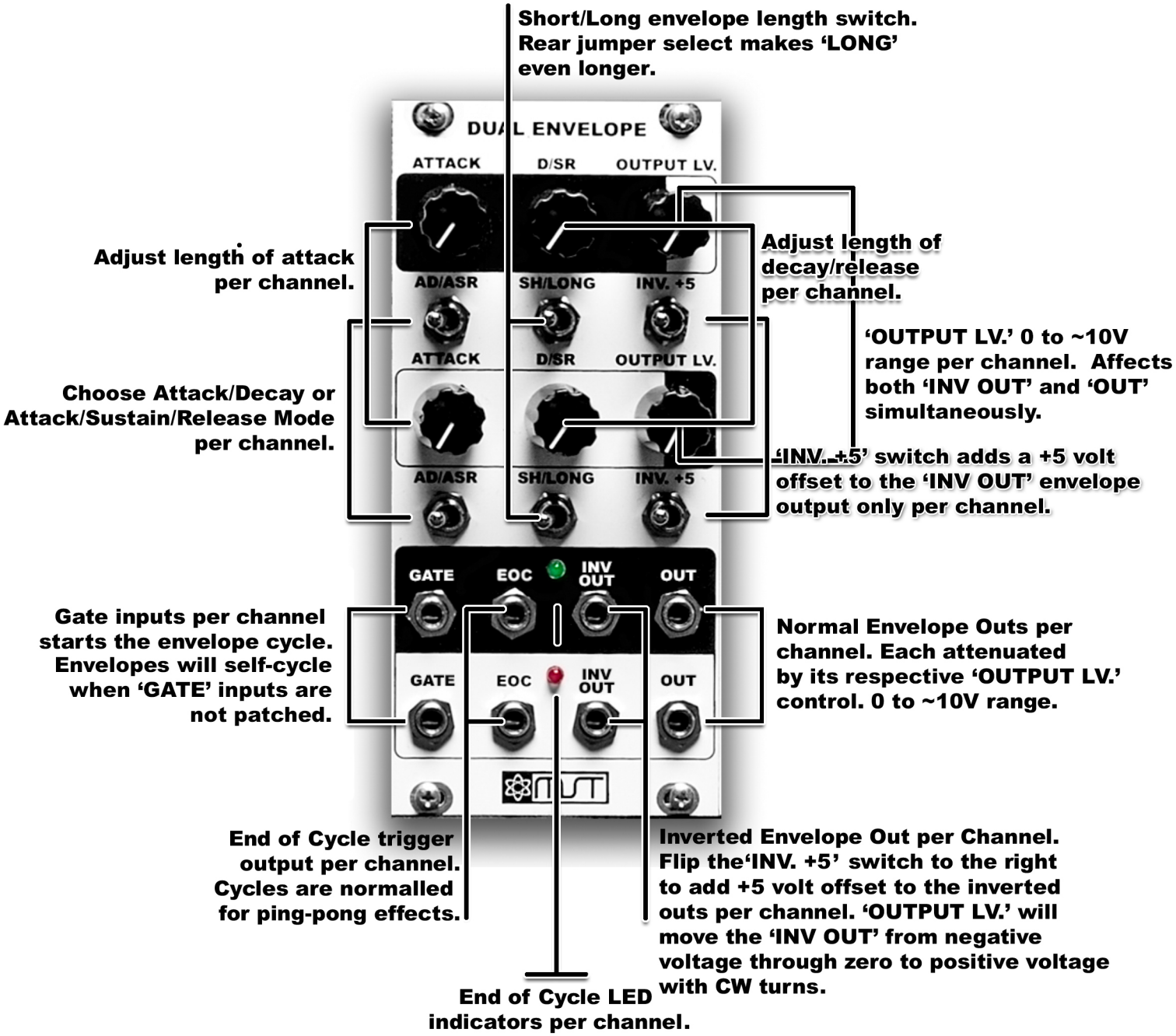

© 2015 Synthrotek