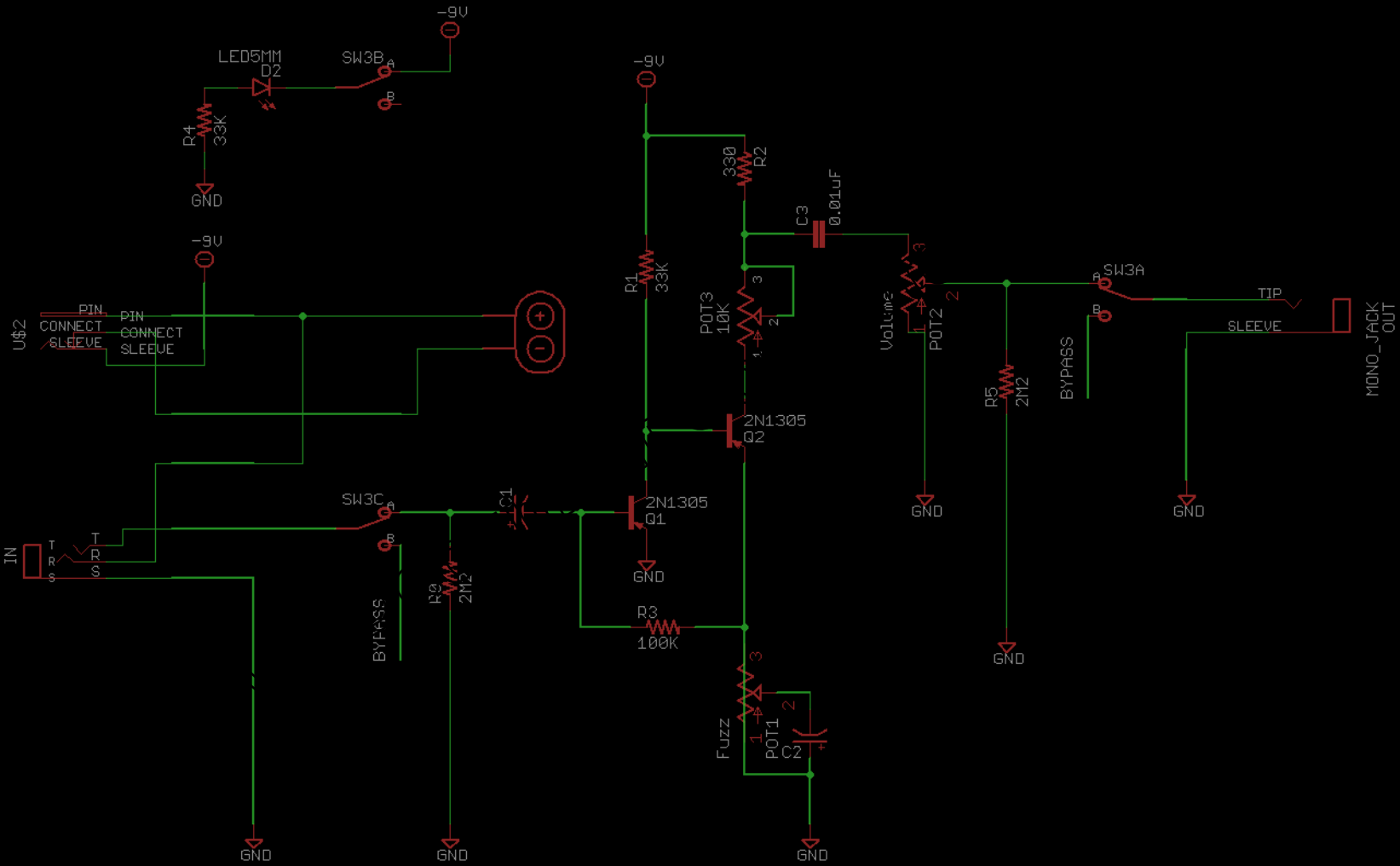
-9V
LED5MM
D2
SW3B
A
B
R4
33K
GND
-9V
U$2
PIN
CONNECT
SLEEVE
PIN
CONNECT
SLEEVE
IN
T
R
S
T
R
S
SW3C
A
B
BYPASS
R0
2M2
C1
2N1305
Q1
GND
R3
100K
-9V
330
R2
C3
0.01uF
R1
33K
POT3
10K
2N1305
Q2
Fuzz
POT1
C2
GND
Volume
POT2
GND
R5
2M2
BYPASS
GND
SW3A
A
B
TIP
SLEEVE
MONO_JACK
OUT
GND